FIRST ANGLE PROJECTION (ALL DIMENSIONS ARE IN mm)

DRAWING NO. 2 456 00 51 026

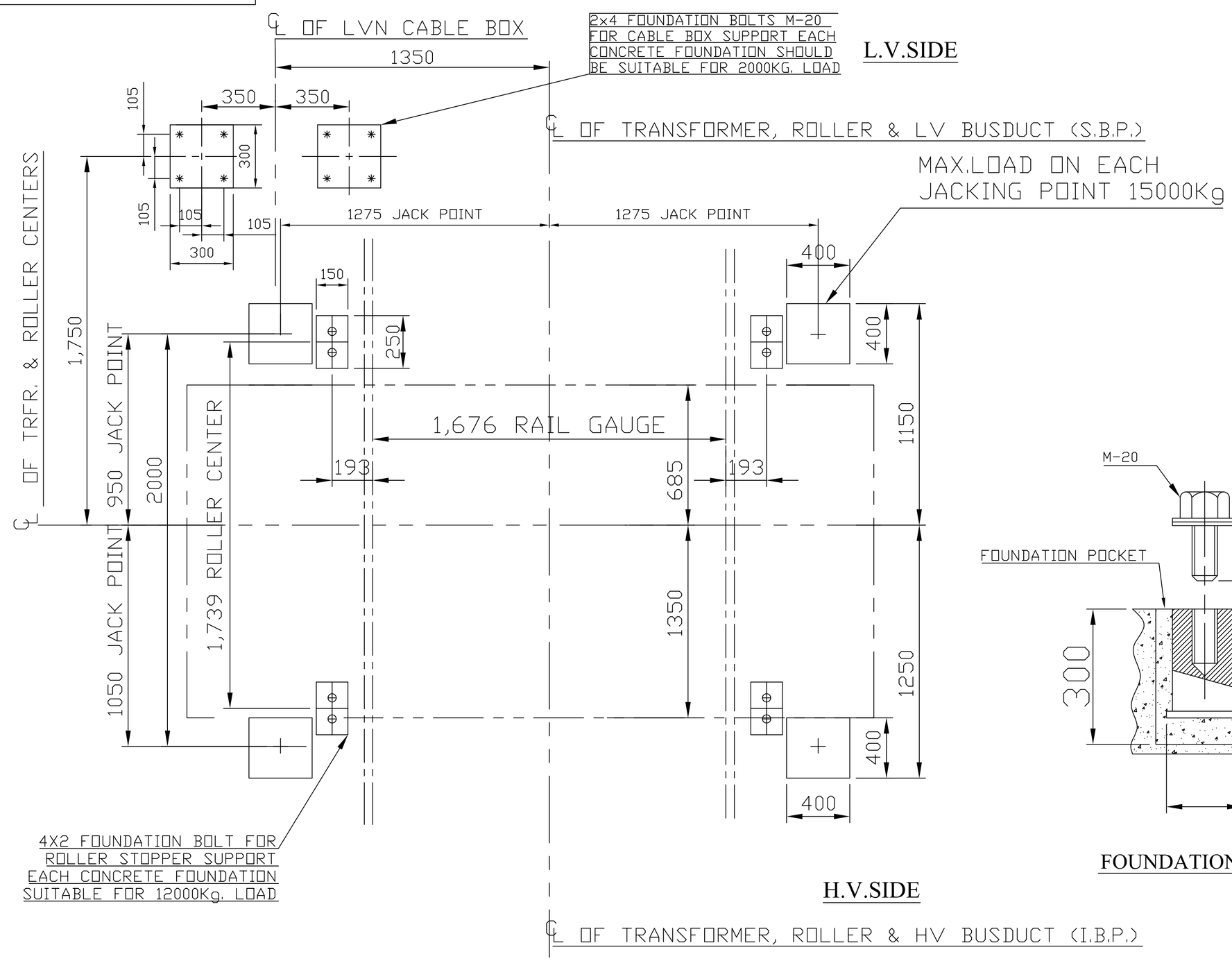

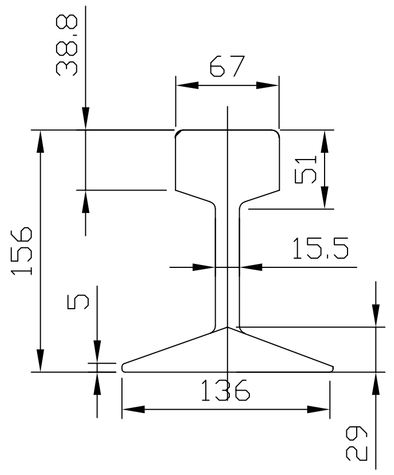

CROSS SECTIONAL VIEW OF RAIL SIZE 52 KG/METER AS PER INDIAN RAILWAY SPECIFICATION

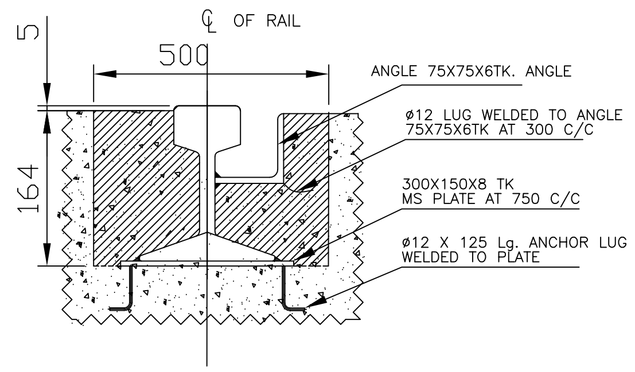

RAIL FIXING DETAIL

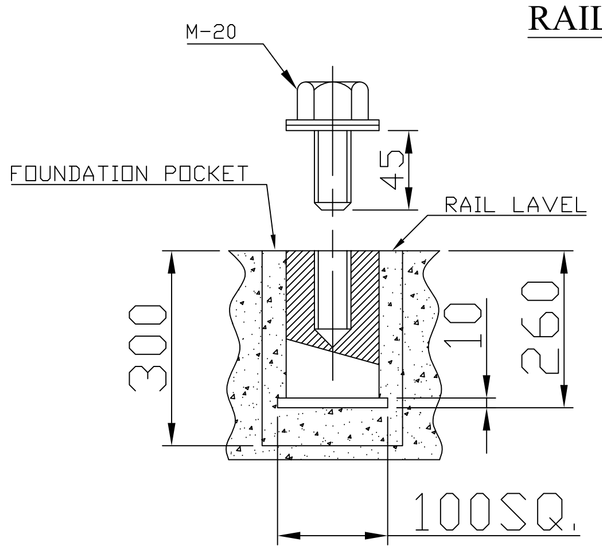

FOUNDATION BOLTS

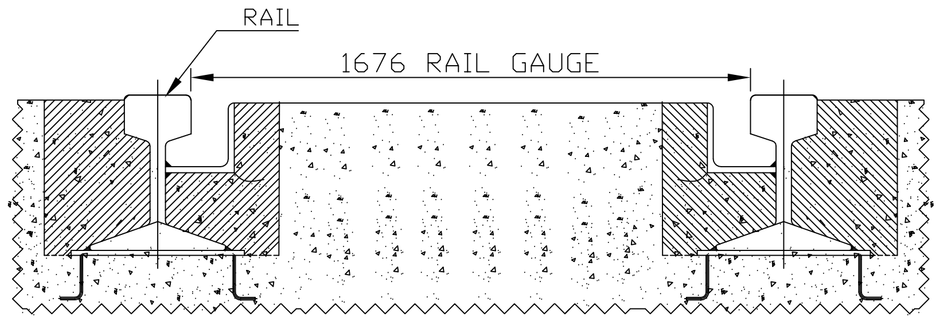

FOUNDATION DETAILS OF RAIL

DIRECTION OF WITH DRAWAL

TABLE FOR BOLTS SIZE FOR VARIOUS FITTINGS			
FITTING	SIZE OF BOLTS	QTY.	SYMBOL
ROLLERS MTG BRACKET	M-20	08	⊕
CABLE BOX SUPPROT	M-20	08	✳

NOTES:-

1. FOUNDATION BOLTS AND ITS HARDWARES ARE IN THE B.H.E.L. SCOPE OF SUPPLY.
2. ALL FOUNDATION HARDWERES ARE Z.P.P.
3. ALL CONCRETE FOUNDATION SHOULD BE IN THE LEVEL OF RAIL LEVEL, REFER DETAIL OF FOUNDATION BOLT ALSO.
4. GROUTING OF FOUNDATION BOLTS SHOULD BE DONE AT THE TIME OF ERECTION.
5. ALL DIMENSIONS ARE mm .

THE INFORMATION ON THIS DOCUMENT IS THE PROPERTY OF BHARAT HEAVY ELECTRICALS LIMITED. IT MUST NOT BE USED DIRECTLY OR INDIRECTLY IN ANY WAY DETRIMENTAL TO THE INTEREST OF THE COMPANY.

REF. DRG. NO. POW213694. DWG.

SIGN & DATE

INVENTORY NO.

REV	DATE	ALTERED / CHECKED	REV	DATE	ALTERED / CHECKED	REV	DATE	ALTERED / CHECKED	REV	DATE	ALTERED / CHECKED

P.O. NO.– CEE/SE–IV/BHADRADRI TPS (4x270 MW)

ADDITIONAL INFORMATION WO. 71290N18000

STATUS OF DRAWING U

TYPE OF PRODUCT 20/16 MVA, 16.5/6.9 KV ONAF/ONAN COOLED UNIT TRANSFORMER

OR

NAME OF CUSTOMER/PROJECT M/S TSGENCO MANUGURU TPS. (4X270 MW MANUGURU TPS)

DISTRIBUTION OF PRINTS

TRE-1, TRP-1, BAY1&2-3, BAY9-4,

BHARAT HEAVY ELECTRICALS LTD. JHANSI

	NAME	SIGN	DATE	NO. OF VAR
DRN	MSC		12.10.15	–
CHD	RCS/VPS			
APPD	VJ			

DEPT	GRADE OF UN. TOL. DIM.	SCALE	WEIGHT [KG]	REF. TO ASSY. NO.	ITEM NO	NO. OF ITEM
TRE		–	–	1 456 00 50 903	–	–
CODE 406						

TITLE **FOUNDATION PLAN FOR TRANSFORMER**

CARD CODE

DRAWING NO. 2 456 00 51 026 REV. 00

SHEET NO. 01 NO. OF SHEETS 01

SIZE A2